A
Mini-Project Report on

Smart Labs

Submitted in complete fulfillment of the requirements for the degree of
BACHELOR OF ENGINEERING
IN
Computer Science & Engineering

Artificial Intelligence & Machine Learning
by

Karan Saji Vethody (22106023)
Suraj Vishwakarma (22106019)
Disha Waghmare (22106033)
Shikshita Yadav (22106092)

Under the guidance of

Dr. Jaya Gupta

Department of Computer Science & Engineering
(Artificial Intelligence & Machine Learning)
A. P. Shah Institute of Technology
G. B. Road, Kasarvadavali, Thane (W) - 400615
University Of Mumbai
2024-2025

Parshvanath Charitable Trust's
A. P. SHAH INSTITUTE OF TECHNOLOGY
(Approved by AICTE New Delhi & Govt. of Maharashtra, Affiliated to University of Mumbai)
(Religious Jain Minority)

DEPARTMENT OF COMPUTER SCIENCE & ENGINEERING
(ARTIFICIAL INTELLIGENCE & MACHINE LEARNING)

CERTIFICATE

This is to certify that the project entitled "**Smart Labs"** is a bonafide work of Karan Saji Vethody (22106023), Suraj Vishwakarma (22106019), Disha Waghmare (22106033), Shikshita Yadav (22106092) submitted to the University of Mumbai in complete fulfillment of the requirement for the award of **Bachelor of Engineering** in **Computer Science & Engineering (Artificial Intelligence & Machine Learning).**

Dr. Jaya Gupta	Dr. Jaya Gupta
Mini Project Guide	Head of Department

Parshvanath Charitable Trust's
A. P. SHAH INSTITUTE OF TECHNOLOGY
(Approved by AICTE New Delhi & Govt. of Maharashtra, Affiliated to University of Mumbai)
(Religious Jain Minority)

DEPARTMENT OF COMPUTER SCIENCE & ENGINEERING
(ARTIFICIAL INTELLIGENCE & MACHINE LEARNING)

Project Report Approval

This Mini project report entitled **"Smart Labs"** by **Karan Saji Vethody, Suraj Vishwakarma, Disha Waghmare and Shikshita Yadav** is approved for the degree of ***Bachelor of Engineering*** in ***Computer Science &Engineering***, (AIML) ***2024-25***.

External Examiner: _____

Internal Examiner: _____

Place: APSIT, Thane

Date:

Declaration

We declare that this written submission represents my ideas in my own words and where others' ideas or words have been included, I have adequately cited and referenced the original sources. I also declare that I have adhered to all principles of academic honesty and integrity and have not misrepresented or fabricated or falsified any idea/data/fact/source in my submission. I understand that any violation of the above will be cause for disciplinary action by the Institute and can also evoke penal action from the sources which have thus not been properly cited or from whom proper permission has not been taken when needed.

Karan Saji Vethody	Suraj Vishwakarma	Disha Waghmare	Shikshita Yadav
(22106023)	(22106019)	(22106033)	(22106092)

ABSTRACT

This project presents the design and implementation of a Smart Lab Automation System using ESP32, Passive Infrared Sensor (PIR), and relay modules. Traditional manual control of lab equipment often leads to inefficiencies and unnecessary energy consumption. In response, our system enables automated monitoring and control of electrical devices based on occupancy and ambient conditions. The ESP32 microcontroller processes sensor data, M detects motion, and relay modules manage device switching, ensuring optimized energy usage. We discuss the architecture, functionality, and benefits of our system, including improved energy efficiency, enhanced safety, and remote monitoring capabilities. Through real-world implementation and evaluation, we demonstrate the feasibility and effectiveness of integrating IoT-based automation in research environments, paving the way for sustainable and intelligent lab management.

Index

Index			Page no.
Chapter-1			
	Introduction		1
Chapter-2			
	Literature Survey		3
	2.1	History	4
	2.2	Review	5
Chapter-3			
	Problem Statement		7
Chapter-4			
	Experimental Setup		9
	4.1	Hardware Setup	10
	4.2	Software Setup	10
Chapter-5			
	Proposed system and Implementation		11
	5.1	Block Diagram of proposed system	12
	5.2	Description of Block diagram	13
	5.3	Implementation	25
Chapter-6			
	Conclusion		26
	6.1	Conclusion	27
	6.2	Future scope	27
References			28

CHAPTER 1

INTRODUCTION

1. INTRODUCTION

The IoT-based Smart Lab System enhances energy efficiency, automation, and safety in research environments by utilizing ESP32 microcontrollers and Microwave Radar Sensors (MRS). This system enables automated control of lighting and electrical devices based on real-time occupancy detection, reducing energy wastage and improving operational efficiency. By integrating IoT technology, Smart Labs provide a cost-effective and intelligent solution for modern laboratories, ensuring optimal resource utilization and sustainability. The implementation of IoT-driven automation has revolutionized laboratory management by eliminating manual intervention and optimizing energy consumption. One such innovation is the Smart Lab System, designed to automate lighting, equipment control, and environmental monitoring. This system ensures that lab devices operate only when necessary, creating a more sustainable and efficient research space.

At its core, the Smart Lab System employs an ESP32 microcontroller to process data from Microwave Radar Sensors (MRS) and relay modules. MRS detects motion and occupancy, triggering relay-based automation to control lab lighting and electrical appliances. The ESP32 microcontroller processes this data, ensuring that devices are switched on or off as needed. This automation significantly reduces unnecessary energy consumption while maintaining optimal working conditions for researchers. Beyond energy efficiency, safety and convenience are key advantages of this system. By automating lab operations, the system minimizes human errors, prevents equipment from being left on unnecessarily, and enhances overall laboratory security. Additionally, the IoT-based Smart Lab System can be expanded to include remote monitoring and cloud integration, allowing researchers to track and manage lab resources in real-time.

By implementing IoT-based automation, Smart Labs ensure a sustainable, safe, and efficient research environment. This system not only optimizes energy usage and enhances safety but also supports innovation by providing a smart, well-managed workspace. Its integration into laboratories makes it a versatile and scalable solution for improving research productivity and sustainability.

CHAPTER 2

LITERATURE SURVEY

2. LITERATURE SURVEY

2.1-HISTORY

The evolution of IoT-based Smart Lab Systems is closely linked to the broader advancements in automation and sensor technology. The foundation was laid in the late 20th century with the introduction of basic building automation systems, which focused on manual and programmable control of lighting and electrical appliances. These early systems, while effective, lacked adaptability and required significant human intervention.

The early 2000s saw the rise of wireless sensor networks (WSNs) and embedded systems, leading to the development of smart monitoring solutions in laboratories. These advancements enabled basic motion detection and automated control, reducing energy wastage and improving resource management. However, the lack of real-time data processing and connectivity limited their scalability.

A significant breakthrough occurred in the 2010s with the emergence of Internet of Things (IoT) technology. Microcontrollers like ESP32 provided wireless connectivity, edge computing capabilities, and seamless integration with cloud platforms, allowing laboratories to implement real-time monitoring and automation. Simultaneously, Microwave Radar Sensors (MRS) improved occupancy detection, overcoming the limitations of traditional PIR (Passive Infrared) sensors by offering higher sensitivity and accuracy.

Building on these advancements, the concept of IoT-based Smart Labs emerged as an efficient solution for automating energy consumption and laboratory safety. Early implementations focused on controlling lighting and electrical devices based on motion detection, but as IoT technology advanced, these systems became more intelligent, scalable, and customizable. Today, ESP32-based Smart Labs leverage MRS for motion detection and relay modules for automated switching, ensuring optimized energy use and enhanced security.

As IoT technology continues to evolve, Smart Lab Systems are expected to become even more sophisticated, integrating AI-driven analytics, cloud-based monitoring, and predictive maintenance. These advancements will further enhance laboratory efficiency, sustainability, and research productivity, making Smart Labs an essential component of modern scientific and industrial research environments.

2.2-LITERATURE REVIEW

[1] P. Rajakumar, Barath C. Kanna, R. Archana, A. Akshaya, K Abhinaya, M. Boobalan, "Automation of Room Lighting System Using Arduino and PIR Sensor", IEEE, December 2022

The paper "Automation of Room Lighting System Using Arduino and PIR Sensor" by P. Rajakumar et al. (IEEE, December 2022) addresses energy wastage in India, where nearly 20% of electricity is lost due to inefficiencies. The authors propose an automated lighting system using an Arduino microcontroller and a Passive Infrared (PIR) sensor to detect human motion. The system automatically turns lights on when a person is present and off when the room is vacant, reducing energy consumption and minimizing manual intervention. This approach enhances energy efficiency and sustainability in smart environments.

[2] A. C. de Melo, R. C. G. de Sousa, and J. C. de Oliveira, "Internet of Things Environment Automation: A Smart Lab Practical Approach", IEEE, 2022

The paper "Internet of Things Environment Automation: A Smart Lab Practical Approach" by A. C. de Melo et al. (IEEE, 2022) explores the use of IoT technologies to automate laboratory environments. It presents a practical approach for integrating IoT devices and sensors to monitor and control lab conditions, improving efficiency, safety, and resource management. The study highlights the design, implementation, and benefits of IoT-based automation in modern smart labs.

[3] M. S. Hossain, M. Fotouhi, R. Hasan, N. A. Mahmud, M. A. Hossain, and N. N. N. Mahmud, "Smart-Lab: Design and Implementation of an IoT-based Laboratory Platform", IEEE, 2020

The paper titled "Smart-Lab: Design and Implementation of an IoT-based Laboratory Platform" by M. S. Hossain et al., published in 2020, presents the development of a Smart-Lab system utilizing Internet of Things (IoT) technologies integrated with Wireless Sensor Networks (WSNs). The system aims to provide a reliable platform for remote surveillance and control of research laboratory activities, creating an intelligent environment for efficient management.

[4] Armin Kobilica, Muhammad Izzuddin Al Fikri, Farag Ahmed Azzedin, Tarek Rahil Sheltami, Luai M. Alhems, "The Perspectives of the Integrated IoT Devices in the Improvement of the Industrial Lab Experience", IEEE, 2020

The paper titled "The Perspectives of the Integrated IoT Devices in the Improvement of the Industrial Lab Experience" by Armin Kobilica et al., presented at the 2019 International Conference on Innovation and Intelligence for Informatics, Computing, and Technologies (3ICT), explores the enhancement of industrial laboratories through the integration of Internet of Things (IoT) devices. The authors analyze various smart lab scenarios, focusing on network security and congestion, and their impact on overall performance. Their findings suggest that enabling security features does not significantly affect smart lab performance, while the integration of IoT devices substantially improves the laboratory experience by reducing time delays inherent in traditional lab setups.

[5] D. N. Le, L. Le Tuan and M. N. D. Tuan, "Smart-building management system: An internet-of-things (IoT) application business model in vietnam", vol. 141, pp. 22-35, 2019.

The paper titled "Smart-building management system: An Internet-of-Things (IoT) application business model in Vietnam" by D. N. Le, L. Le Tuan, and M. N. D. Tuan, published in 2019, examines the integration of IoT technologies into building management systems within the Vietnamese context. The authors discuss how the emergence of ubiquitous sensors, smart devices, and broadband internet capacity has enabled the integration of networks for synchronous data collection and processing, facilitating prompt decision-making and real-time responses to changes. They propose a business model that leverages IoT applications to enhance the efficiency and effectiveness of smart-building management, addressing the accelerating significance and prevalence of IoT appreciated by academicians and policymakers.

CHAPTER 3

PROBLEM STATEMENT

3.PROBLEM STATEMENT

Traditional lighting systems in college laboratories result in excessive energy consumption due to manual operation and lack of adaptive control. Lights often remain on even when not needed, leading to increased electricity costs and a larger environmental footprint. To address this issue, an intelligent lighting system using ESP32, PIR sensors, relay module is required. However, challenges such as managing sensor sensitivity, optimizing detection range, and ensuring seamless automation must be overcome to achieve efficient energy conservation and a comfortable learning environment.

CHAPTER 4

EXPERIMENTAL SETUP

4. EXPERIMENTAL SETUP

4.1 Hardware Used:

- ESP32-D
- Development Board
- Relay Module
- Microwave Radar Sensor
- Mini PIR Sensor
- Remote Sensor
- 9v Power Supply
- Resistors
- Breadboard
- Wires

4.2 Software Used:

- Arduino IDE
- Wokwi Simulation

CHAPTER 5

PROPOSED SYSTEM AND IMPLEMENTATION

5. PROPOSED SYSTEM AND IMPLEMENTATION

5.1. Block Diagram of proposed system

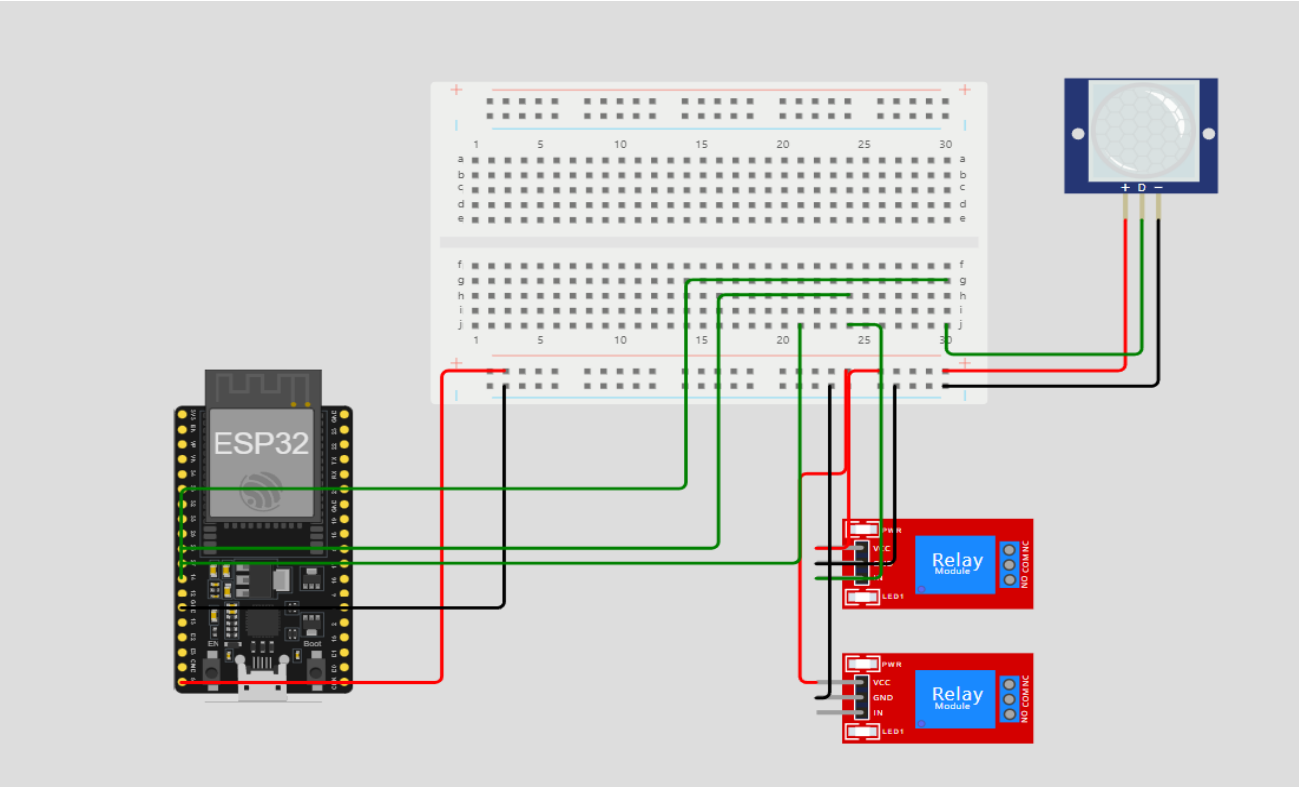

Fig. 5.1.1. SYSTEM DESIGN

Relay Module Connection:

- VCC is connected with 5V pin of ESP32.
- GND is connected with GND of ESP32.
- ESP32 is connected with ESP32digital pin 4.
- Similarly, second relay's In pin is connected to digital pin 7.

PIR Module Connection:

- VCC of PIR is connected to the 5v pin of ESP32.
- GND is connected to the GND of ESP32
- Digital pin of PIR is connected to digital pin 2 of ESP32.

5.2. Description of Block Diagram

1.WHAT IS MINI PIR SENSOR?

All living objects, whose body temperature is more than 0°C, emit the heat in form of infrared radiation through their body, also called as thermal radiations. This Radiated energy is invisible to human eye. These Signals can be detected by using PIR sensor which is specially designed for such purpose. PIR sensor i.e. Passive Infrared Sensor, passive word indicates PIR Sensor does not generate or radiate any energy for detection purposes. PIR Sensors don't detect or measure "HEAT"; they detect the infrared radiation emitted or reflected from objects. They are small, inexpensive, low power and easy to use. They are commonly found at home, medical, factories etc. areas. A Passive infrared sensor is an electronic sensor that measures infrared light radiating from objects. PIR sensors mostly used in PIR-based motion detectors. Also, it used in security alarms and automatic lighting applications. The below image shows a typical pin configuration of the PIR sensor, which is quite simple to understand the pinouts. The PIR sensor consist of 3 pins:

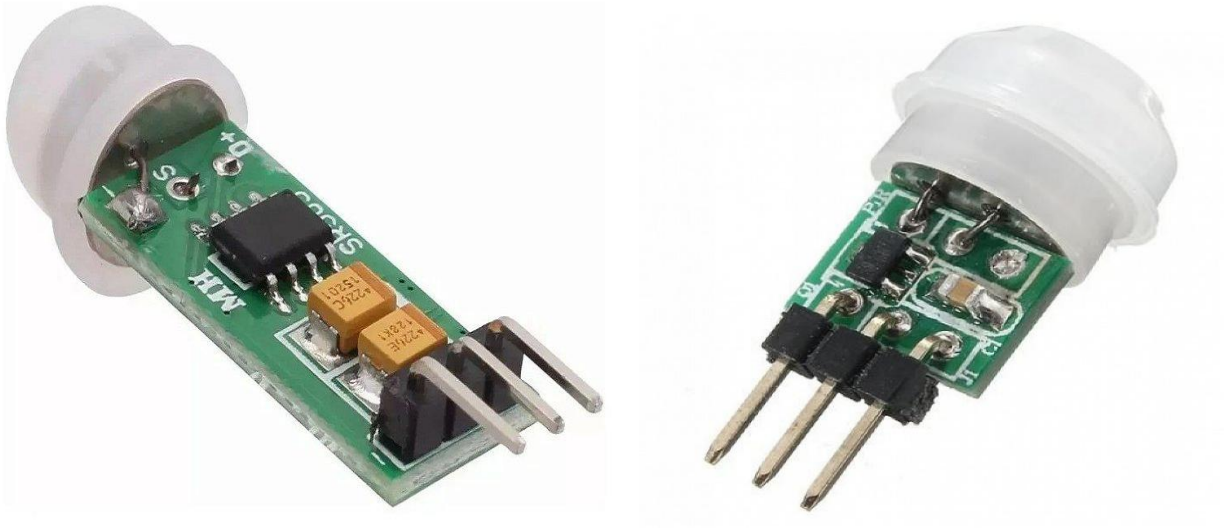

Fig 5.2.1. MINI PIR SENSOR

- Pin1 corresponds to the drain terminal of the device, which connected to the positive supply 5V DC.
- Pin2 corresponds to the source terminal of the device, which connects to the ground terminal via a 100K or 47K resistor. The Pin2 is the output pin of the sensor. The pin 2 of the sensor carries the detected IR signal to an amplifier from the
- Pin3 of the sensor connected to the ground.

RANGE OF MINI PIR SENSOR:

- Indoor passive infrared: Detection distances range from 25 cm to 20 m.
- Indoor curtain type: The detection distance ranges from 25 cm to 20 m.

• Outdoor passive infrared: The detection distance ranges from 10 meters to 150 meters. Outdoor passive infrared curtain detector: distance from 10 meters to 150 meters.

SPECIFICATION OF MINI PIR SENSOR:

• Detection range: up to 7 meters

• Detection angle: 110 degrees

• Operating voltage: DC 4.5V - 12V DC

• Output signal: 3.3V digital output

• Delay time: adjustable from 0.3 seconds to 5 minutes

• Operating temperature: -15°C to +70°C

2.WHAT IS MICROWAVE RADAR SENSOR?

A microwave radar sensor is an electromagnetic wave-based sensor used for motion detection, distance measurement, and object tracking. It operates by emitting microwave signals (in the GHz range) and detecting the reflected waves from nearby objects. By analyzing the Doppler shift or time delay of the reflected signal, it can determine the presence, speed, and distance of an object.

Key Features of Microwave Radar Sensors

- Frequency Range:
  - Operates at 2.4 GHz, 5.8 GHz, 10 GHz, 24 GHz, or 77 GHz, depending on the application.
- Operating Principle:
  - Emits microwave signals → detects the reflected waves → processes the data.
- Detection Range:
  - Can detect motion from a few centimeters to several meters, depending on power and frequency.
- Penetration Capability:
  - Can pass through walls, plastic, and non-metallic objects, making it suitable for concealed applications.
- Accuracy and Reliability:
  - Provides precise distance and motion detection.
  - Less affected by temperature, light, or environmental conditions compared to infrared sensors.
- Power Consumption:
  - Low power consumption, making it suitable for battery-operated devices.

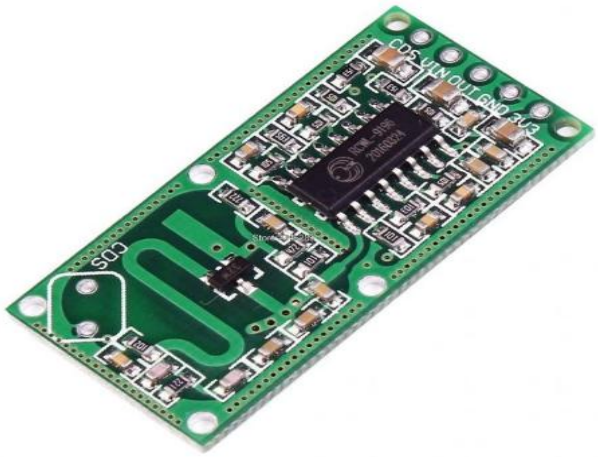

Fig 5.2.2. MICROWAVE RADAR SENSOR

3.IR SENSOR

The image shows a 3-pin IR (Infrared) Receiver Sensor, which is commonly used for remote control applications. This sensor detects infrared signals from a remote control or other IR-emitting devices and converts them into digital output signals.

Key Features of IR Receiver Sensor

- Pin Configuration:
  - GND (Ground): Connected to the negative terminal of the power supply.
  - Vs (Voltage Supply): Connected to the positive terminal (typically 3.3V or 5V).
  - OUT (Output): Provides the digital signal output.
- Operating Voltage:
  - Typically operates at 3.3V to 5V.
- Frequency Range**:**
  - 30 kHz to 56 kHz (commonly 38 kHz for remote controls).
- Detection Angle:
  - Around 45° to 60°.
- Detection Range:
  - Up to 5-10 meters, depending on the power of the IR source.
- Signal Processing:
  - Includes automatic gain control (AGC) to filter out noise.
- Digital Output:
  - Outputs a LOW signal when IR is detected.
  - Outputs a HIGH signal when no IR signal is present.

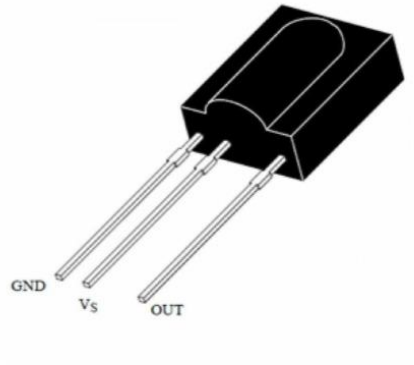

Fig 5.2.3. IR SENSOR

4.BLUETOOTH MODULE

A Bluetooth module is a wireless communication device that enables short-range data exchange between electronic devices over Bluetooth technology. It uses radio frequency (RF) signals in the 2.4 GHz ISM band to establish a wireless link for communication between devices, such as microcontrollers, smartphones, computers, and other Bluetooth-enabled hardware.

Key Features of Bluetooth Modules

- Frequency Band:
  - Operates in the 2.4 GHz ISM band (Industrial, Scientific, and Medical band).
- Communication Range:
  - Class 1: Up to 100 meters.
  - Class 2: Up to 10 meters (commonly used in modules).
  - Class 3: Up to 1 meter.
- Data Transfer Rate:
  - Varies from 1 Mbps to 3 Mbps, depending on the module version.
- Communication Protocol:
  - Uses Serial Communication (UART) to interface with microcontrollers.
- Low Power Consumption:
  - Designed for low-power wireless applications.
- Secure Communication:
  - Features encryption for data security.

Common Bluetooth Modules

1. HC-05:
   - Supports both master and slave modes.
   - Uses UART communication (RX/TX pins).

- Range: ~10 meters.
- Configurable using AT commands.

2. HC-06:
    - Supports slave mode only.
    - Simpler and cheaper than HC-05.
    - Used for basic Bluetooth communication.
3. HM-10:
    - BLE (Bluetooth Low Energy) module.
    - Compatible with iOS and Android.
    - Low power consumption, ideal for IoT applications.
4. ESP32 Bluetooth:
    - Integrated Wi-Fi and Bluetooth capabilities.
    - Suitable for IoT and smart home projects

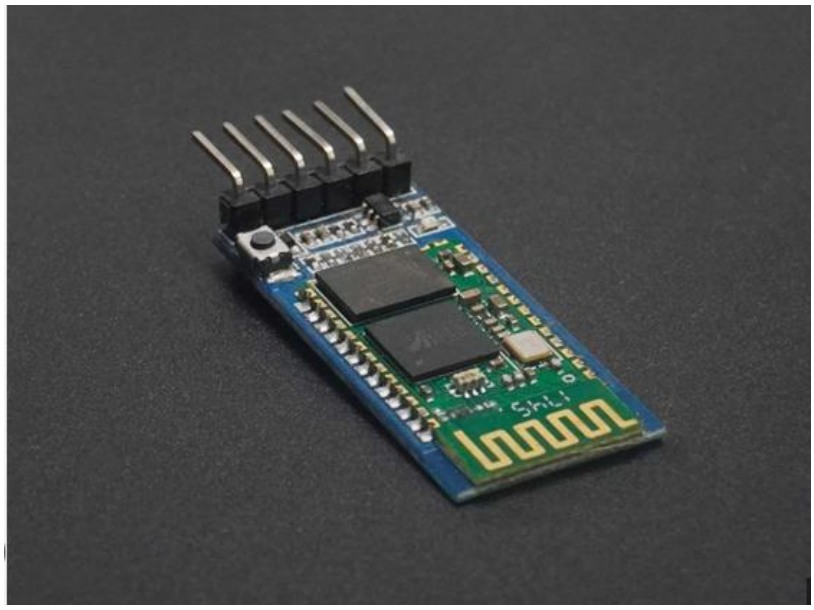

Fig 5.2.4. BLUETOOTH MODULE

5.REMOTE

The image shows a universal IR remote control, typically used for lighting systems, home automation, and electronic devices. It communicates with IR receivers by sending infrared signals at a specific frequency (usually 38 kHz).

Key Features of the IR Remote Control

- Buttons and Functions:
    - ON: Turns the device or light on.
    - TIMER: Activates a timer function (likely to turn the device on/off after a set time).
    - OFF: Turns the device off.

- MODE (1 to 8): Allows selection of different modes or presets (e.g., brightness levels, light patterns, or operational modes).
- DIM (+/-): Controls the brightness or intensity of the light.

- Frequency:
  - Operates at 38 kHz, the standard frequency for IR remote controls.
- Range:
  - Effective range of 5 to 10 meters, depending on the IR receiver's sensitivity.
- Power Source:
  - Powered by coin-cell batteries (commonly CR2025 or CR2032).

Applications of IR Remote Control

- Lighting Control:
  - Used to control LED lights, dimmers, or decorative lighting systems.
- Home Automation:
  - Adjusting appliances and devices in smart home setups.
- Fan and AC Control:
  - Remotely turning devices on/off or adjusting modes.
- Entertainment Systems:
  - Used with TVs, speakers, and media players.

Fig 5.2.5. REMOTE

6.WHAT IS RELAY MODULE?

A power relay module is an electrical switch that is operated by an electromagnet. The electromagnet is activated by a separate low-power signal from a microcontroller. When activated, the electromagnet pulls to open or close an electrical circuit. A simple relay consists of a wire coil wrapped around a soft iron core, or solenoid, an iron yoke that delivers a low reluctance path for magnetic flux, a movable

iron armature and one or more sets of contacts. The movable armature is hinged to the yoke and linked to one or more sets of moving contacts. Held in place by a spring, the armature leaves a gap in the magnetic circuit when the relay is de-energized. While in this position, one of the two sets of contacts is closed while the other set remains open. When an electrical current is passed through a coil, it generates a magnetic field that in turn activates the armature. This movement of the movable contacts makes or breaks a connection with the fixed contact. the contacts were open. When switching off the current to the coil, the armature is returned, by force, to its relaxed position. This force is usually provided by a spring, but gravity can also be used in certain applications. Most power relays are manufactured to operate in a quick manner. Relay modules are simply circuit boards that house one or more relays. They come in a variety of shapes and sizes, but are most commonly rectangular with 2, 4, or 8 relays mounted on them, sometimes even up to 16 relays.

Relay modules contain other components than the relay unit. These include indicator LEDs, protection diodes, transistors, resistors, and other parts.

• A relay is an electrical switch that can be used to control devices and systems that use higher voltages. In the case of module relay, the mechanism is typically an electromagnet.

• The relay module input voltage is usually DC. However, the electrical load that a relay will control can be either AC or DC, but essentially within the limit levels that the relay is designed for.

• A relay module is available in an array of input voltage ratings: It can be a 3.2V or 5V relay module for low power switching, or it can be a 12 or 24V relay module for heavy-duty systems.

• The relay module information is normally printed on the surface of the device for ready reference. This includes the input voltage rating, switch voltage, and current limit. 19 The relay module's function is mainly to switch electrical devices and systems on or off. It also serves to isolate the control circuit from the device or system being controlled. This is important because it allows you to use a microcontroller or other low-power device to control devices with much higher voltages and currents.

5V RELAY PIN CONFIGURATION:

The pin configuration of the 5V relay is shown below. This relay includes 3-pins where each pin and its functionality are shown below.:

Signal Pin: The signal pin is mainly used for controlling the relay. This pin works in two cases like active low otherwise active high. So, in active low case, the relay activates once we provide an active low signal toward the signal pin, whereas, in an active high case, the relay will trigger once we provide a high signal toward the signal pin. However, these modules generally work on an active high signal which will strengthen the relay coil to make contact with the common terminal with the normally open terminal.

5V VCC: This pin needs 5V DC to work. So 5V DC power supply is provided to this pin. Ground: This pin connects the GND terminal of the power supply

Ground: This pin connects the GND terminal of the power supply.

ADVANTAGES OF RELAY MODULE

The advantages of the relay module include the following.

- A remote device can be controlled easily
- It is triggered with less current but it can also trigger high power machines
- Easily contacts can be changed
- At a time, several contacts can be controlled using a single signal
- Activating part can be isolated
- It can switch AC or DC
- At high temperatures, it works very well

DISADVANTAGES OF RELAY MODULE

The disadvantages of the relay module include the following.

- When contacts of relay modules are used overtime then they may damage
- Noise can be generated through the opening & closing of the contacts.
- Time taken for switching is High

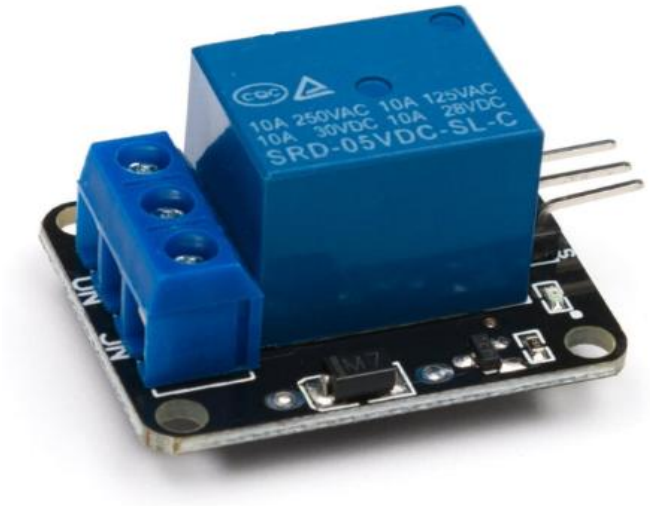

Fig.5.2.6. RELAY MODULE

7.WHAT IS ESP32-D:

The ESP32-D series, is a high-performance, low-power microcontroller board designed for IoT (Internet of Things), robotics, and industrial applications. It features a dual-core Xtensa LX6 processor running at 240 MHz, making it highly efficient for multitasking and real-time operations. The board offers Wi-Fi (802.11 b/g/n) and Bluetooth v4.2 + BLE for wireless communication, making it ideal for connected applications. It operates on 3.3V and includes 34 digital GPIO pins, 18 ADC channels, and

2 DAC channels, offering flexibility for interfacing with external components such as sensors, actuators, and displays.

The ESP32-D series is designed for low-power applications, featuring deep sleep and light sleep modes, making it suitable for battery-powered devices. It supports multiple communication protocols, including SPI, I2C, UART, and I2S, enabling seamless integration with various peripherals. The board also includes TLS 1.2 encryption, hardware encryption, and secure boot, ensuring data security. The ESP32-D series is widely used in IoT devices, home automation, wearables, robotics, industrial automation, and audio streaming applications. Its extended temperature range (-40°C to 105°C) makes it suitable for industrial-grade use. Overall, the ESP32-D is a powerful, versatile, and cost-effective platform for both hobbyists and professionals.

Key Features of ESP32-D:

- Processor:
  - Dual-core Xtensa LX6 @ 240 MHz
  - 32-bit architecture
- Memory:
  - 520 KB SRAM
  - 448 KB ROM
  - Supports external flash (up to 16 MB)
- Wireless Connectivity:
  - Wi-Fi: 802.11 b/g/n (2.4 GHz)
  - Bluetooth: v4.2 + BLE
- Input/Output Pins:
  - 34 GPIOs (General Purpose Input/Output)
  - 18 ADC channels (12-bit resolution)
  - 2 DAC channels (8-bit resolution)
  - PWM support for motor and LED control
- Power Supply:
  - Operating Voltage: 3.3V
  - Compatible with USB, battery, and external power
- Communication Protocols:
  - SPI: 4 controllers
  - I2C: 2 controllers
  - UART: 3 ports
  - I2S: For audio applications
- Power Efficiency:

    - Low-power modes: Deep sleep and light sleep
    - Suitable for battery-powered devices
- Security Features:
    - TLS 1.2 encryption, hardware encryption, and secure boot
- Temperature Range:
    - -40°C to 85°C (standard version)
    - -40°C to 105°C (industrial version)

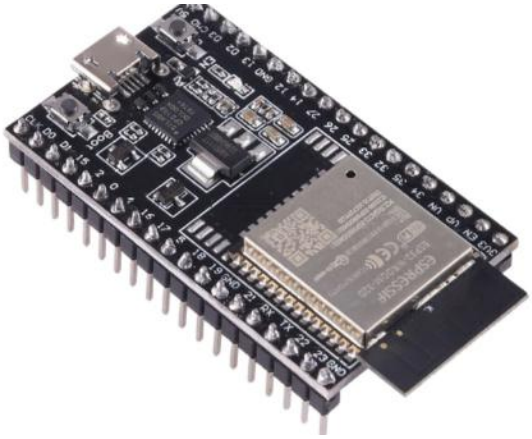

Fig 5.2.7. ESP32-D

8.WHAT IS DEVELOPMENT BOARD?

A development board is a hardware platform used for prototyping, testing, and developing electronic circuits and applications. It typically consists of a microcontroller (MCU) or microprocessor (MPU) along with essential peripherals and interfaces, making it easy for developers to create and test their projects without needing to build the entire circuit from scratch. Development boards are widely used in embedded systems, IoT devices, robotics, and automation.

Key Components of a Development Board

- Microcontroller/Microprocessor:
    - The core of the board, responsible for processing and executing instructions.
    - Examples: ATmega328P (Arduino Uno), ESP32 (ESP32 board), RP2040 (Raspberry Pi Pico).
- Input/Output (I/O) Pins:
    - Digital Pins: Used for digital signals (HIGH/LOW states).
    - Analog Pins: For reading analog values (e.g., sensors).
- Power Supply:
    - Provides the necessary operating voltage (e.g., 3.3V, 5V).
    - Can be powered via USB, battery, or external power source.
- Communication Interfaces:

    - UART: Serial communication.
    - I2C: For connecting multiple devices with fewer pins.
    - SPI: High-speed communication with peripherals.
- Memory:
    - RAM: For temporary data storage.
    - Flash Memory: For storing programs and firmware.
- Connectivity (optional):
    - Wi-Fi, Bluetooth, LoRa, Zigbee for wireless communication.
- Onboard Peripherals:
    - LEDs, buttons, voltage regulators, and reset switches.
- Programming Interface:
    - USB or ICSP header for flashing code onto the board.

Types of Development Boards

1. Microcontroller Boards:
    - Based on MCUs, used for low-level control and embedded applications.
    - Examples:
        - Arduino Uno: ATmega328P-based, beginner-friendly.
        - ESP32: Dual-core MCU with Wi-Fi and Bluetooth.
        - STM32 Nucleo: ARM Cortex-M series boards for advanced projects.
2. Single-Board Computers (SBCs):
    - Based on MPUs, offering OS support for complex applications.
    - Examples:
        - Raspberry Pi: Runs Linux, used for IoT, servers, and AI projects.
        - BeagleBone Black: Linux-based SBC with GPIOs.
3. IoT and Wireless Boards:
    - Designed for wireless communication and connectivity.
    - Examples:
        - ESP8266: Low-cost Wi-Fi-enabled board.
        - ESP32-D: Wi-Fi + Bluetooth for IoT projects.
        - Adafruit Feather: LoRa and Bluetooth-enabled boards.

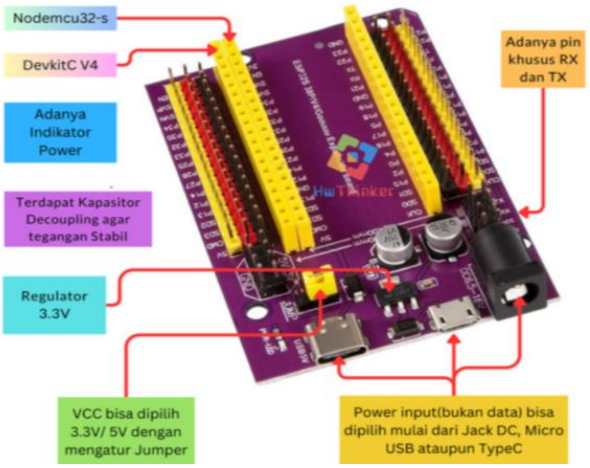

Fig 5.2.8. Development Board

5.3-IMPLEMENTATION

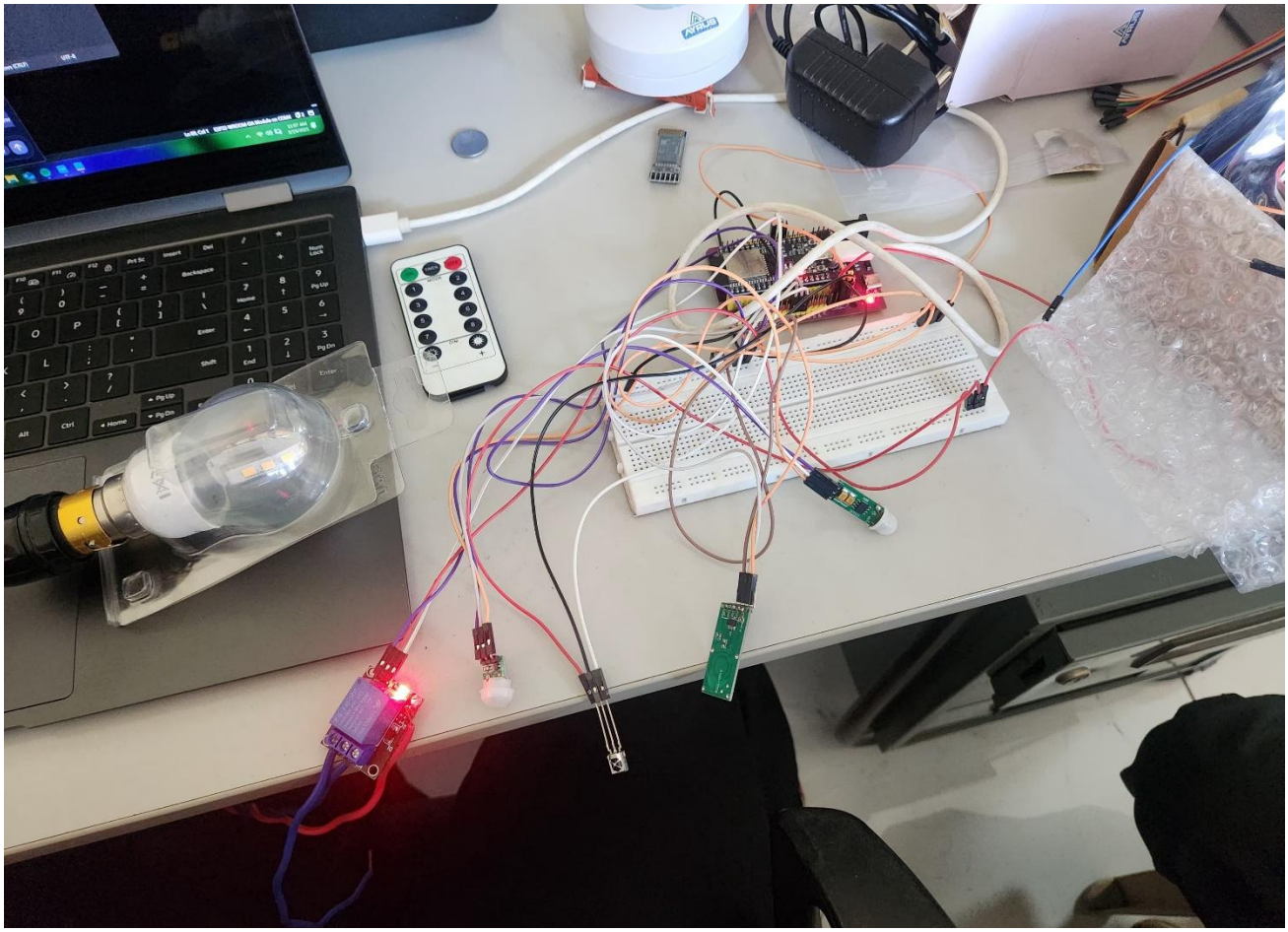

Fig 5.3.1

CHAPTER 6

CONCLUSION

6. CONCLUSION

6.1-CONCLUSION

In conclusion, IoT-based Smart Labs utilizing ESP32 and Microwave Radar Sensors offer a transformative approach to intelligent research environments by integrating automation and real-time monitoring. These advancements significantly enhance energy efficiency, safety, and operational adaptability, creating an optimized setting for scientific research. The ability to incorporate wireless connectivity, sensor-based automation, and environmental monitoring ensures an efficient and sustainable lab infrastructure, reducing energy wastage and improving resource management.

However, the successful deployment of such systems involves addressing several critical challenges. Ensuring reliable sensor integration, maintaining data security, and providing scalability are essential for the system's effectiveness. Additionally, addressing network reliability, interoperability with existing lab infrastructure, and optimizing power consumption is crucial for widespread adoption. By overcoming these challenges, IoT-powered Smart Labs can achieve their full potential, fostering innovation and efficiency in research environments.

6.2-FUTURE SCOPE

The future scope of IoT-based Smart Labs using ESP32 and Microwave Radar Sensors holds exciting potential for advancements in automated and intelligent research environments. Future developments will focus on enhancing sensor accuracy, improving real-time data processing, and optimizing wireless connectivity for seamless lab automation. Integration with emerging technologies such as AI-driven analytics, cloud computing, and edge computing will enable predictive maintenance, adaptive energy management, and enhanced security monitoring.

Efforts will also be directed at improving interoperability with existing lab infrastructures, ensuring data privacy and security, and developing more energy-efficient sensor networks. Expanding these systems globally will standardize smart lab implementations, reduce operational costs, and promote sustainability, ultimately transforming the way research environments are managed and optimized.

REFERENCES

[1] P. Rajakumar, Barath C. Kanna, R. Archana, A. Akshaya, K Abhinaya, M. Boobalan, “Automation of Room Lighting System Using Arduino and PIR Sensor”, IEEE, December 2022

[2] A. C. de Melo, R. C. G. de Sousa, and J. C. de Oliveira, “Internet of Things Environment Automation: A Smart Lab Practical Approach”, IEEE, 2022

[3] M. S. Hossain, M. Fotouhi, R. Hasan, N. A. Mahmud, M. A. Hossain, and N. N. N. Mahmud, “Smart-Lab: Design and Implementation of an IoT-based Laboratory Platform”, IEEE, 2020

[4] Armin Kobilica, Muhammad Izzuddin Al Fikri, Farag Ahmed Azzedin, Tarek Rahil Sheltami, Luai M. Alhems, “The Perspectives of the Integrated IoT Devices in the Improvement of the Industrial Lab Experience”, IEEE, 2020

[5] J. Liu, Y. Zhang, Y. Li, “Design and Implementation of Smart Laboratory System Based on IoT and Cloud Computing", IEEE, vol. 12, 2020.

[6] D. N. Le, L. Le Tuan and M. N. D. Tuan, "Smart-building management system: An internet-of-things (IoT) application business model in vietnam", vol. 141, pp. 22-35, 2019.

[7] A. K. Singh, S. K. Singh, R. , “Smart Lab IoT Research Platform for Real-World IoT Applications", Journal of Sensor and Actuator Networks, vol. 9, 2019.